Panasonic

PM-VD8ULFC-W

8MP Fixed Dome Colour Camera

Panasonic Cameras are developed to deliver high-performance security solutions, safeguarding homes, shops, and offices with advanced technology and reliable surveillance. Featuring a combination of infrared (IR) and white LED lighting, these cameras are capable of capturing full-colour images even in low-light conditions, ensuring clear and detailed footage around the clock. Integrated with intelligent analytics, the cameras can automatically detect and respond to specific security events such as line crossing, abandoned or missing objects, and more.



ONVIF® NDAA COMPLIANT H.265+ H.265 H.264 JPEG SECURE SSL ENCRYPTION IP67

Key Features

- 8MP Fixed dome full colour camera
- 120dB Wide Dynamic Range
- Color Night Vision: 0.02 lux @F1.6, AGC ON
- 20~30m IR night view distance
- 20~30m white light view distance
- IP67 protections from dust and water
- IK10 protection for Vandal resistance
- Advanced encryption and access control
- NDAA

Specifications

CAMERA	
Type	8MP Fixed Dome Full Colour Camera
Image Sensor	1/2.8" CMOS
Max Resolution	8MP (3840×2160)
Electronic Shutter	1/3s~1/100000s
Min. Illumination	0.02 lux @F1.6, AGC ON 0 lux (illumination ON)
IR Distance / Light Range	20~30m IR night view distance 20~30m white light view distance
LENS	
Focal Length	2.8mm@F1.6
Focus	Fixed
Iris Type	Fixed Iris
Optical Zoom	-
Angular Field of View	H.FoV:101° V.FoV:53° D.FoV:120°
Day&Night	ICR
IMAGE	
Video Compression	Mainstream: H.265+/H.265/H.264+/H.264 Sub/third stream: H.265+/H.265/H.264+/H.264/MJPEG
Supported Resolution	8MP (3840×2160) 6MP (3200×1800) 4MP (2688×1520) 2K (2560×1440) 1080P (1920×1080 20P (1280×720) D1(704×480) VGA (640×480) 640×360, 480×240 CIF(352×288)
Number of Supported Stream	3
Mainstream	8MP (1~20fps) 60Hz: 6MP/4MP/2K/1080P (1~30fps) 50Hz: 6MP/4MP/2K/1080P (1~25fps)
Sub Stream	60Hz: 720P/D1/VGA/640×360/CIF/480×240 (1~30fps) 50Hz: 720P/D1/VGA/640×360/CIF/480×240 (1~25fps)
Third Stream	60Hz: 720P/D1/640×360/CIF (1~30fps) 50Hz: 720P/D1/640×360/CIF (1~25fps)
Bit Rate	64 Kbps~12Mbps
Bit Rate Type	VBR/CBR
Image Settings	ROI Saturation Brightness Hue Contrast Wide Dynamic Sharpness Image Mirror Image Flip NR etc.adjustable through client software or web browser
Audio Compression	G711A/U
Region Of Interest	Each ROI to be configured separately
OPERATIONAL	
Wide Dynamic Range	120dB
Back Light Compensation (BLC)	Yes
High Light Compensation (HLC)	Yes
Defog	Yes
Digital Noise Reduction (DNR)	Yes
S/N ratio	≥50dB
Angle Adjustment	Pan: 0°~355° Tilt: 0°~70° Rotation: 0°~180°
INTERFACES	
Network	RJ 45 10M/100M self-adaptive Ethernet port
Video	-
Audio	1CH audio input 1CH built-in MIC
Storage	Built-in micro SD card slot, up to 256GB
Alarm	-

Specifications

DORI DISTANCE	
Lens	2.8mm
Detect	86m(284ft)
Observe	34m(114ft)
Recognize	17m(56ft)
Identify	8m(27ft)
INTELLIGENT ANALYTICS	
Statistics	-
Audio Exception Detection	-
Face Detection	-
Face Recognition and Matching	
Video Metadata(Human/Vehicle Attributes / Two Wheelers)	-
OTHER ANALYTICS	
Motion Detection	-
Smart Alarm	Motion detection SMD SD card full, SD card error IP address conflict Cable disconnection Video exception (scene change, video blur and abnormal color detection)
Smart Event	Line Crossing Region Intrusion Detection (Human/Motor Vehicle/Non-Motor Vehicle Classification) Abandoned/Missing Object Detection
FUNCTIONS	
Remote Monitoring	Web browser NVR Panasonic VMS 2.X Mobile APP
Web Browser	Chrome 89.0+ Edge 89.0+ Firefox 87.0+ Safari 14.0+
Online Connection	Support simultaneous monitoring for up to 10 users Support multi-stream real time transmission
Network Protocol	UDP, IPv4, IPv6, DHCP, NTP, RTSP, RTP, RTCP, RTMP, PPPoE DDNS, SMTP, FTP, 802.1x, SNMP, UPnP, HTTP, HTTPS HTTP POST, P2P, QoS
Interface Protocol	ONVIF Profile S/G/M/T
Other Function	Watermark IP Address Filtering Video Mask Heartbeat Smart Supplement Light Corridor Pattern Image Distortion Correction ANR Cloud Upgrade
Security	Video encryption Firmware encryption HTTPS encryption Configuration encryption Illegal login lock IP address filtering 802.1x authentication Basic and digest authentication for HTTP/RTSP NDAA
GENERAL	
Power Supply	DC12V/PoE
PoE	Yes
Power Consumption	< 7.5W
Weather Protection	IP67 protections from dust and water IK10 protection for Vandal resistance
Operating Environment	-30°C~60°C (-22°F~140°F) Humidity: less than 95% (non-condensing)
Storage Environment	-30°C~65°C (-22°F~149°F) Humidity: less than 95% (non-condensing)
Dimensions (mm)	Ø119×87.8
Weight (net)	Approx. 0.64KG
Installation	Ceiling mounting Wall mounting
Certificate	EMC: CE/EN 55032:2015+A11:2020 EN 55035:2017+A11:2020 Safety: IEC 62368-1:2020+A11:2020 RoHS: 2011/65/EU

Appearance

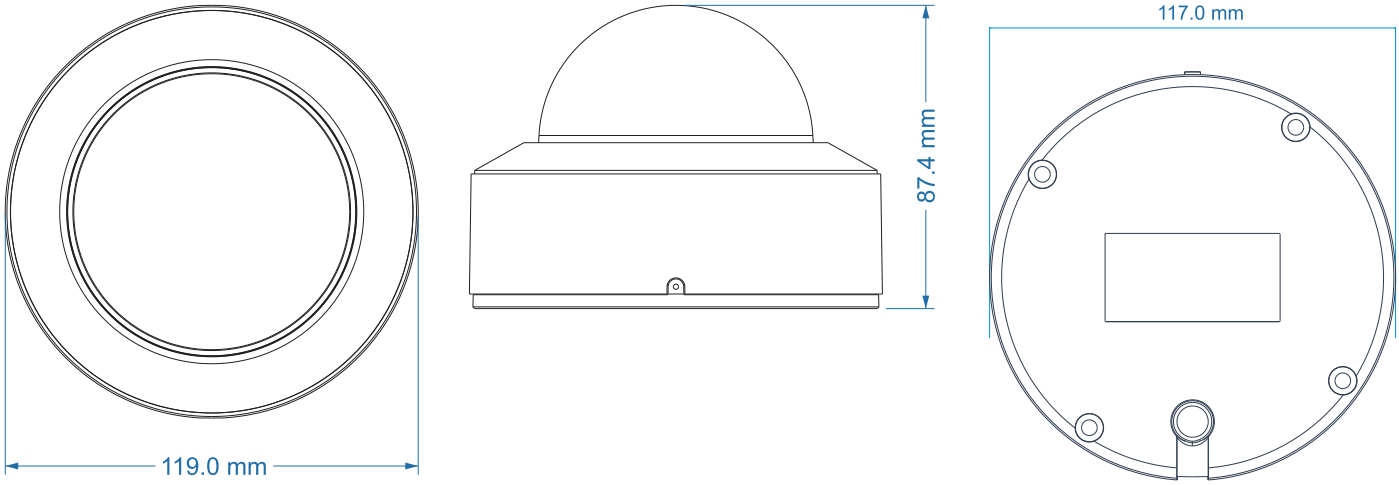

Optional Accesories

Mount Bracket



PM-YH0101B-W
Junction box



PM-YZJ0203-W
Wall Mount Bracket



PM-YH0101B-W+
PM-YZJ0406-W
Wall Mount Bracket



PM-YH0101B-W+
PM-YZJ0406-W+
PM-YZJ0501-W
Pole Mount Bracket



PM-YH0101B-W+
PM-YZJ0406-W+
PM-YZJ0601-W
Corner Mount Bracket



PM-YH0101B-W+
PM-YZJ0810-W
Ceiling Mount Bracket

Disclaimer:
Panasonic accepts no responsibility or liability for the performance of the network, nor for any third-party products used in conjunction with this system.
Product dimensions and masses are approximate. Specifications are subject to change without notice.