Panasonic

PM-PD2ULVR-W

2MP Varifocal Dome IP Camera 4.3X Motorized Zoom

Panasonic Cameras are developed to deliver high-performance security solutions, safeguarding homes, shops, and offices with advanced technology and reliable surveillance. Integrated with intelligent analytics, the cameras can automatically detect and respond to specific security events such as line crossing, abandoned or missing objects, and more. These proactive features provide real-time alerts enhancing security and offering users greater peace of mind. The built-in Region of Interest (ROI) functionality allows users to prioritize Critical zones within the camera's field of view.



ONVIF® NDAA COMPLIANT H.265+ H.265 H.264 JPEG SECURE SSL ENCRYPTION IP67 AI

Key Features

- 2MP Varifocal dome network camera
- 4.3x Optical Zoom
- 120dB Wide Dynamic Range
- Color Night Vision: 0.003ux @F1.3, AGC ON
- IR range: 30~50m
- IP67 protections from dust and water
- IK10 protection for Vandal resistance
- Advanced encryption and access control
- NDAA

Specifications

CAMERA	
Type	2MP Varifocal Dome Network Camera
Image Sensor	1/2.8 ¨CMOS
Max Resolution	2MP(1920×1080)
Electronic Shutter	1/3s~1/100000s
Min. Illumination	0.003ux @F1.3, AGC ON
IR Distance / Light Range	30~50m
LENS	
Focal Length	2.8~12mm@F1.3
Focus	Motorized Varifocal
Iris Type	DC AUTO
Optical Zoom	4.3x (Motorized zoom)
Angular Field of View	H.FoV: 105°~30° V.FoV: 55°~16° D.FoV: 123 °~ 35°
Day&Night	ICR
IMAGE	
Video Compression	Mainstream: H.265+/H.265/H.264+/H.264 Sub/third stream: H.265+/H.265/H.264+/H.264/MJPEG
Supported Resolution	1080P (1920×1080) 720P (1280×720) D1(704×480) VGA(640×480) 480×240 CIF(352×288)
Number of Supported Stream	3
Mainstream	60Hz: 1080P/720P(1~30fps) 50Hz: 1080P/720P(1~25fps)
Sub Stream	60Hz: 720P/D1/640×480/ 640×360/480×240/CIF (1~30fps) 50Hz: 720P/D1/640×480/ 640×360/480×240/CIF (1~25fps)
Third Stream	60Hz: D1/480×240/CIF (1~30fps) 50Hz: D1/480×240/CIF (1~25fps)
Bit Rate	64Kbp~6Mbps
Bit Rate Type	VBR/CBR
Image Settings	ROI Saturation Brightness Hue Contrast Wide Dynamic Sharpness Image Mirror Image Flip NR etc.adjustable through client software or web browser
Audio Compression	G711A/U
Region Of Interest	Each ROI to be configured separately
OPERATIONAL	
Wide Dynamic Range	120dB
Back Light Compensation (BLC)	Yes
High Light Compensation (HLC)	Yes
Defog	-
Digital Noise Reduction (DNR)	Yes
S/N ratio	≥50dB
Angle Adjustment	Pan: 0°~345° Tilt: 0°~77° Rotation: 0°~345°
INTERFACES	
Network	RJ 45 10M/100M self-adaptive Ethernet port
Video	CVBS output (BNCx1)
Audio	1CH audio input 1CH audio output 1CH built-in microphone
Storage	Built-in micro SD card slot, up to 256GB
Alarm	1CH alarm input 1CH alarm output
DORI DISTANCE	
Lens	2.8~12mm(W) 2.8~12mm(T)
Detect	42m(138ft) 154m(505ft)

Specifications

Observe	17m(56ft) 62m(203ft)
Recognize	8m(26ft) 31m(102ft)
Identify	4m(13ft) 15m(49ft)
INTELLIGENT ANALYTICS	
Statistics	Yes, with NVR or SD Card
Audio Exception Detection	Yes
Face Detection	Yes
Face Recognition and Matching	Yes, with NVR
Video Metadata(Human/Vehicle Attributes / Two Wheelers)	Simultaneously Captures Human Body Motor Vehicle And Non-Motor Vehicle Extracts 13 Human Features 4 Motor Vehicle Features 1 Non-Motor Vehicle Feature
OTHER ANALYTICS	
Motion Detection	-
Smart Alarm	Motion detection SMD SD card full, SD card error IP address conflict Cable disconnection Video exception (scene change, video blur and abnormal color detection)
Smart Event	Line Crossing Region Intrusion Detection (Human/Motor Vehicle/Non-Motor Vehicle Classification) Abandoned/Missing Object Detection Loitering Detection Illegal Parking Detection Target Counting By Line Target Counting By Area Face Detection Video Metadata
FUNCTIONS	
Remote Monitoring	Web browser NVR Panasonic VMS 2.X Mobile APP
Web Browser	Chrome 89.0+ Edge 89.0+ Firefox 87.0+ Safari 14.0+
Online Connection	Support simultaneous monitoring for up to 8 users Support multi-stream real time transmission
Network Protocol	UDP, IPv4, IPv6, DHCP, NTP, RTSP, RTP, RTCP, PPPoE, DDNS SMTP, FTP, 802.1x, SNMP, UPnP, RTMP, HTTP, HTTPS HTTP POST, P2P, QoS
Interface Protocol	ONVIF Profile S/G/M/T
Other Function	Watermark IP address filtering Video mask Heartbeat Smart IR Corridor pattern ANR Cloud upgrade
Security	Video encryption Firmware encryption HTTPS encryption Configuration encryption Illegal login lock IP address filtering 802.1x authentication Basic and digest authentication for HTTP/RTSP NDAA
GENERAL	
Power Supply	DC12V/PoE
PoE	Yes, IEEE802.3af
Power Consumption	< 8.5W
Weather Protection	IP67 protections from dust and water IK10 protection for Vandal resistance
Operating Environment	-30°C~60°C (-22°F~140°F) Humidity: less than 95% (non-condensing)
Storage Environment	-30°C~65°C (-22°F~149°F) Humidity: less than 95% (non-condensing)
Dimensions (mm)	Ø141x100.2

Specifications

GENERAL	
Weight (net)	Approx. 0.89KG
Installation	Ceiling mounting Wall mounting
Certificate	EMC: CE/EN 55032:2015+A11:2020 EN 55035:2017+A11:2020 Safety: IEC 62368-1:2020+A11:2020 RoHS: 2011/65/EU

Appearance

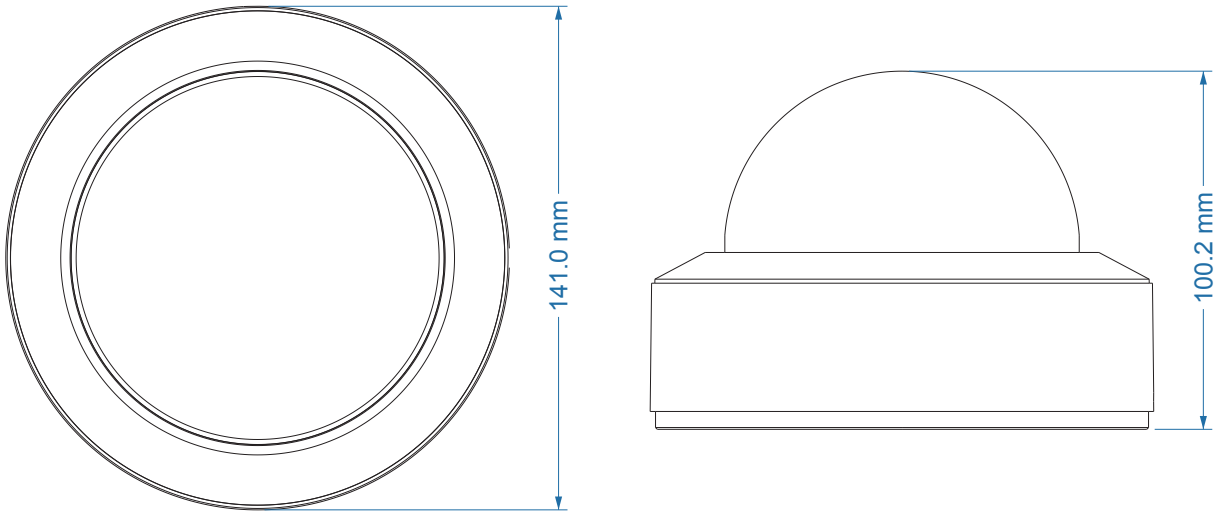

Optional Accesories

Mount Bracket



PM-YH0207-W
Junction box aluminium, Base part



PM-YZJ0701B
In-Ceiling mount



PM-YH0207-W+
PM-YZJ0407-W
Wall Mount Bracket



PM-YH0207-W+
PM-YZJ0407-W+
PM-YZJ0501-W
Pole Mount Bracket



PM-YH0207-W+
PM-YZJ0407-W+
PM-YZJ0601-W
Corner Mount Bracket



PM-YH0207-W+
PM-YZJ0811-W
Ceiling Mount Bracket

Disclaimer:
Panasonic accepts no responsibility or liability for the performance of the network, nor for any third-party products used in conjunction with this system.
Product dimensions and masses are approximate. Specifications are subject to change without notice.